DocuSign Envelope ID: 7E43F06D-C2FB-463B-B185-F7A7DBD0548D

DOCUMENT NOT CONSIDERED FINAL UNLESS ALL SIGNATURES COMPLETED

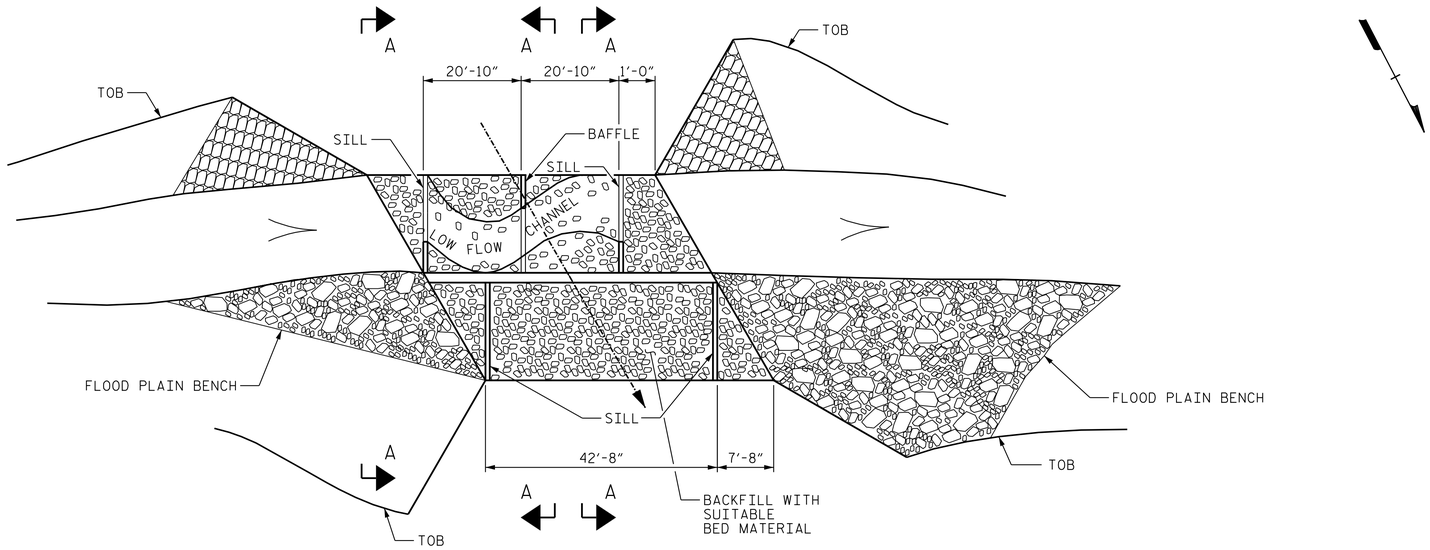

PLAN VIEW

NOTES:

1. BED MATERIAL BETWEEN SILLS/BAFFLES IN THE CULVERT SHALL PROVIDE A CONTINUOUS LOW FLOW CHANNEL. THE MATERIAL SHALL BE NATURAL STONE WITH A GRADATION SIZE SIMILAR TO THAT OF CLASS B RIP RAP. STONES LARGER THAN 10" SHALL NOT BE PLACED WITHIN THE LOW FLOW CHANNEL. BED MATERIALS SUBJECT TO APPROVAL BY THE ENGINEER.
2. SILLS/BAFFLES ARE TO BE 1.0 FT. WIDE, CAST SEPARATELY AND ATTACHED BY DOWELS.
3. TOP OF LOW FLOW SILLS/BAFFLES SHOULD MATCH STREAM BED ELEVATION IN LOW FLOW CHANNEL OF STREAM. (THALWEG)
4. CLASS B RIP RAP MAY BE USED TO SUPPLEMENT NATURAL BED MATERIAL.
5. DO NOT SET ELEVATION OF HIGH SILL/BAFFLES ABOVE BANK FULL.
6. NUMBER OF SILL/BAFFLES DETERMINED BY THE ENGINEER.
7. FOR ADDITIONAL DETAILS, SEE CULVERT SURVEY REPORT.
8. BED MATERIAL SHALL BE PAID BY CONTRACTOR AS CLASS B RIP RAP.

BILL OF MATERIAL

BAR	NO.	SIZE	TYPE	LENGTH	WEIGHT
R1	24	#4	STR	6'-8"	107
R2	56	#4	STR	1'-8"	62
R3	36	#4	STR	0'-8"	16
R4	32	#4	STR	1'-0"	21
TOTAL REINFORCING STEEL					206 LBS
CLASS A CONCRETE					2.0 CY
RIP RAP, CLASS B					41 TONS

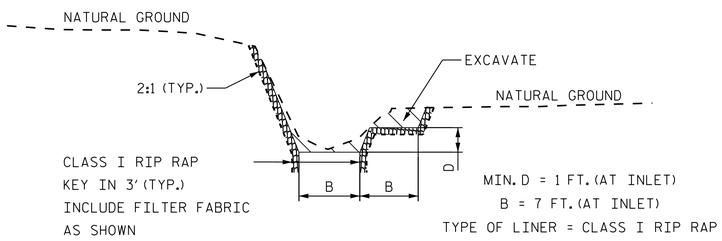

CULVERT INLET CHANNEL
(NOT TO SCALE)

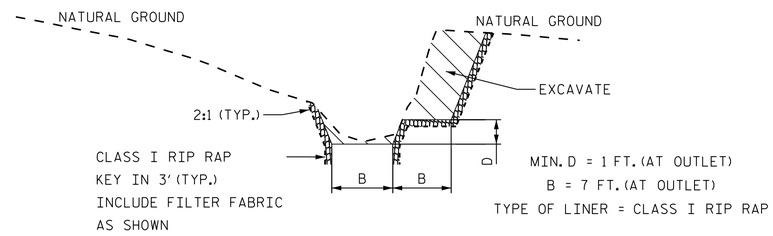

CULVERT OUTLET CHANNEL
(NOT TO SCALE)

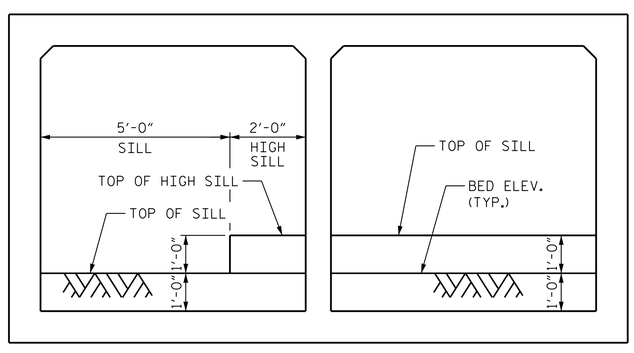

SILL & BAFFLE GEOMETRY

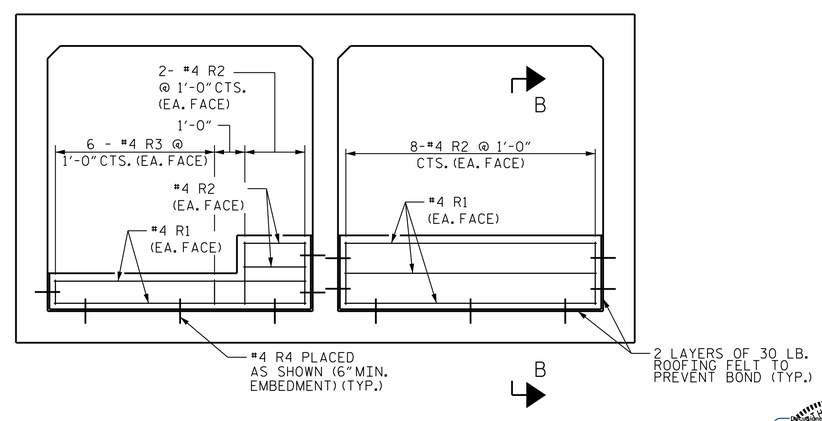

SILL & BAFFLE REINFORCEMENT

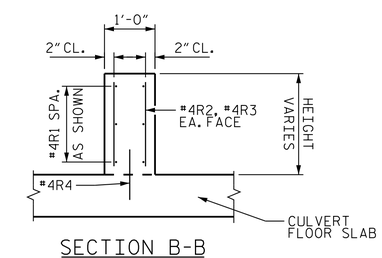

SECTION B-B

SECTION A-A

PROJECT NO. 17BP.14.R.38

CLAY COUNTY

STATION: 12+18.37 -L-

SHEET 7 OF 7

STATE OF NORTH CAROLINA
DEPARTMENT OF TRANSPORTATION
RALEIGH

BAFFLE & SILL DETAILS

Stantec
Stantec Consulting Services Inc.
801 Jones Franklin Road
Suite 300
Raleigh, NC 27606
Tel. (919) 851-6866
Fax. (919) 851-7024
www.stantec.com
License No. F-0672

DRAWN BY : C. B. BAKER DATE : 05-03-12
CHECKED BY : T. R. DUDECK DATE : 05-03-12

9/1/2016

REVISIONS						SHEET NO.
NO.	BY:	DATE:	NO.	BY:	DATE:	C-7
1			3			TOTAL SHEETS
2			4			7

U:\Clay78\Structures\Drawing\C-7.dgn 9/1/2016 10:00:01 AM tdudeck